The orientation of the optical terminal box interface is based on

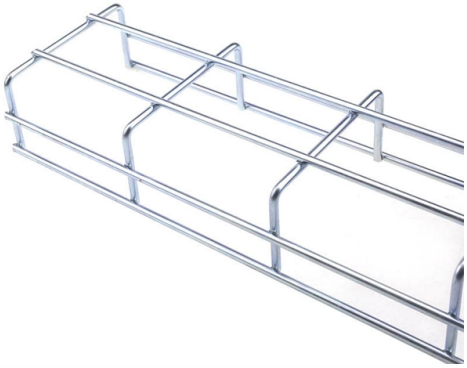

Overview

An optical line termination (OLT), also called an optical line terminal, is a device which serves as the service provider endpoint of a. It provides two main functions: 1. to perform conversion between the electrical signals used by the service provider's equipment and the signals used by the passive optical network.

Key Takeaways

Optical terminal boxes are designed with configurable interface orientations, typically featuring overturnable splice trays, adapter plates, and DIN rail mounting to optimize fiber management and accessibility.

Physical Layout and Orientation

Optical terminal boxes, such as DIN rail-mounted models, are structured to facilitate efficient fiber distribution and termination. The key components affecting interface orientation include: Splice Trays: These trays can often be overturned or rotated, allowing technicians to access fiber splices easily while maintaining organized routing of incoming and outgoing fibers ( ). Adapter Plates and Ports: Adapter plates hold connectors such as SC, LC, FC, or ST, and can be positioned horizontally or vertically depending on the box design.

This orientation ensures that patch cords or pigtails are accessible without bending fibers beyond recommended limits ( ).

DI

© 2026 CJC FIBRE CONSULTANTS - All rights reserved

N Rail or Rack Mounting: Boxes can be mounted on DIN rails inside cabinets or on rack panels. The orientation of the box relative to the rail or panel affects how the adapters face the technician, typically front-facing for easy connection and maintenance ( ).

Interface Considerations

Connector Type and Alignment: The choice of SC/APC, LC, or other connectors influences the orientation of the ports. For example, SC/APC connectors are often angled to reduce back reflection, which may dictate the adapter plate's tilt ( ). Cable Entry and Exit: Boxes are designed with entry points for incoming feeder fibers and exit points for distribution fibers.

Proper orientation ensures minimal stress on fibers and clear separation between input and output lines ( ). Scalability: Some boxes allow stacking or modular expansion, where the orientation of trays and adapters can be adjusted to accommodate additional fibers without obstructing existing connections ( ).

Practical Tips

Ensure splice trays are accessible for maintenance without removing the entire box. Maintain bend radius compliance for all fibers when positioning adapters and trays. Align adapter plates so that patch cords can be connected and disconnected easily, typically facing outward from the cabinet or rack.

Consider future expansion when choosing the orientation, allowing additional trays or adapters to be added without reconfiguring the entire box. By carefully planning the interface orientation, optical terminal boxes provide organized, accessible, and scalable fiber management, supporting efficient connection to OLTs, ONTs, and other PON components ( ).

Article Content

The Comprehensive Guide to Fiber Termination Boxes (FTB): Design ...

A Fiber Termination Box, also known as an optical termination box (OTB), is a compact, specialized enclosure designed for the organization, termination, splicing, and protection of fiber optic

Optical line termination

An optical line termination (OLT), also called an optical line terminal, is a device which serves as the service provider endpoint of a passive optical network. It provides two main functions: 1. to perform conversion between the electrical signals used by the service provider''s equipment and the fiber optic signals used by the passive optical network.

© 2026 CJC FIBRE CONSULTANTS - All rights reserved

Optical distribution frame, terminal box, fiber distribution box, ODF ...

The optical fiber terminal box is usually placed at the end of the horizontal optical cable. The equipment connected by the optical jumper connected from the optical fiber terminal box through the

All You Need To Know About Fiber Termination Boxes: Installation

The fiber termination box is an interface between the fiber cable from the line side and the pigtails to be passed to the fiber distribution frame. A fiber pigtail is a specific hardware connection

101 Guidelines for Fiber Termination Box

According to different designs, the FTBs can be divided into wall-mounted and rack-mounted boxes. The former is normally sealed hanging on the wall, while the latter has a front door

FTTH Terminal Box Selection Guide: Rack, Wall & Outdoor Specs

The Optical Fiber Terminal Box isn''t just a plastic shell—it is the point where mechanical discipline preserves optical budget, where documentation meets physical reality, and where service

Optical cable terminal box and optical fiber distribution box

The optical cable terminal box is a box where both ends of the optical fiber network are prepared to directly divide jumpers to connect to optoelectronic equipment. The size of the terminal

The Function and Type of Optical Fiber Terminal Box | Sopto

There should be an appropriate space and method in the optical fiber terminal box to make the wiring of this part of the optical connection line clear, easy to adjust, and meet the minimum

Understand the Structure of Fiber Optic Termination Boxes

There are many factors that should be considered in the fiber cabling process, such as flexibility, future feasibility, deployment and management costs, etc. In order to handle a large number of fibers with

Guide of Fiber Optic Terminal Box

Fiber optic terminal box is a device that serves as an interface to connect the incoming fiber optic cable with the butterfly cable, either inside or outside a building. The optical fiber

Guide of Fiber Optic Terminal Box

© 2026 CJC FIBRE CONSULTANTS - All rights reserved

Fiber optic terminal box is a product designed for different scenarios in FTTH construction, such as primary or secondary splitting.

Types of Fiber Optic Terminal Boxes: How to Choose the Right

The article discusses choosing fiber optic terminal boxes, covering types, materials, costs, and best practices for efficient network performance. It also addresses FAQs about use and

What is Fiber Termination Box

A Fiber Termination Box (FTB), also known as an Optical Terminal Box (OTB), is a crucial component in Fiber to the Home (FTTH) applications. Its primary function is to efficiently

What is an Optical Fiber Terminal Box

Optical Fiber Terminal Box is a crucial component in today''s FTTH networks, primarily used for terminating, connecting, and managing.

Learn About Fiber Optic Terminal Boxes for FTTH Applications

Explore the benefits and installation of fiber optic terminal boxes for FTTH applications. Get insights into FTTH technology and fiber optic connectors.

Fiber Optic Terminal Box Guide: Choosing the Right

Discover how to select the best fiber optic terminal box for data centers, campus fiber backbones, outdoor FTTH networks, and enterprise fiber

What is an optical network terminal (ONT)?

Commonly known as a “fibre box”, an ONT is installed inside or outside your building as the interface between the optical fibre infrastructure and

101 Guidelines for Fiber Termination Box

Fiber termination box (FTB), also known as optical terminal box (OTB), generally refers to a distribution box specially designed for fiber cable management (fiber patch cables/pigtails) in FTTH

Related Video Reference

This video was associated with the source search result. Verify technical details against current product documentation and project requirements.

© 2026 CJC FIBRE CONSULTANTS - All rights reserved

Contact Us

Continue your research online:

Website: https://cjcconsultants.co.za
Technical inquiry: https://cjcconsultants.co.za/contact.html

This document is for preliminary research. Verify specifications against current standards, product documentation and project requirements.

© 2026 CJC FIBRE CONSULTANTS - All rights reserved