Standard Requirements for the Placement of Simple Distribution Boxes

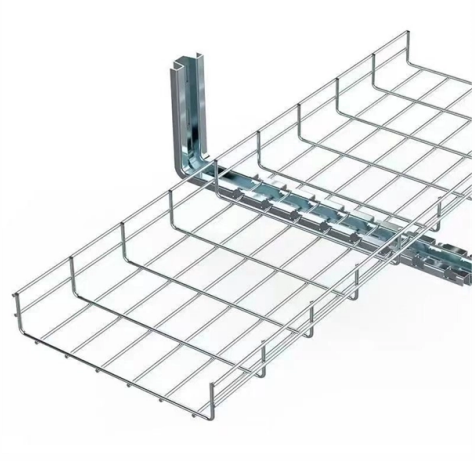

Overview

Requirements And Specifications For Installation Of Distribution Boxes. The installation requirements and specifications of Distribution box involve many.

Key Takeaways

Distribution boxes should be installed in dry, accessible, and well-ventilated locations, at a height of approximately 1. 5 to 1. 8 meters, with proper grounding, protection, and compliance with electrical standards.

Site Selection and Environmental Considerations

Distribution boxes must be placed in dry, ventilated, and easily accessible areas to prevent moisture damage, overheating, and corrosion. Avoid locations near sinks, wet areas, or corrosive environments. For outdoor installations, the box should be elevated at least 3 feet above ground to protect against water and dirt, and the enclosure should have a suitable IP or NEMA rating to resist dust, rain, and sunlight exposure.

Installation Height and Fixing

The bottom edge of the distribution box is typically installed between 1. 5 and 1. 8 meters above the floor for convenient operation and inspection.

Wall-mounted boxes should be 4. 5 to 5. 5 feet high, while ground-mounted boxes should be slightly raised (2–4 inches) to avoid moisture contact.

© 2026 CJC FIBRE CONSULTANTS - All rights reserved

The box must be firmly fixed using appropriate brackets or screws to prevent movement or tilting due to vibration or accidental impact.

Enclosure and Material

Choose an enclosure material based on the environment: Steel: strong and durable, suitable for indoor or industrial use. Stainless steel: highly corrosion-resistant, ideal for harsh environments. Plastic (Polycarbonate/ABS): lightweight, non-conductive, UV-resistant, suitable for outdoor use.

Fiberglass (FRP): strong, insulated, and resistant to harsh conditions. Ensure the enclosure size allows for adequate air circulation and future expansion, and consider modular designs for easier upgrades.

Wiring and Safety Protection

Turn off power before wiring. Use high-temperature resistant copper wires with cross-sectional areas matching load requirements. Maintain neat wiring, proper insulation, and clear labeling of circuits.

Ground all metal parts of the box and internal components. Install protective devices such as circuit breakers, fuses, surge protectors, and leakage protectors for each circuit.

Accessibility and Maintenance

The box should be easily reachable for inspection, maintenance, and emergency operation. Label all circuits clearly, and schedule regular inspections to ensure long-term reliability. Avoid placing the box in areas prone to physical damage or obstruction.

Compliance

Follow local electrical codes such as NEC, IEC, or BS 7671, and use UL/CE-certified components. Ensure all installation steps, including insulation resistance tests and circuit verification, are completed before powering the system. By adhering to these standards, distribution boxes can operate safely, efficiently, and reliably while minimizing risks of electrical hazards.

© 2026 CJC FIBRE CONSULTANTS - All rights reserved

Article Content

Requirements And Specifications For Installation Of Distribution Boxes ...

The installation requirements and specifications of Distribution box involve many aspects, including site selection, fixing method, wiring specifications and safety protection.

Requirements for placing distribution boxes against the wall

Choosing between wall-mounted vs floor-mounted distribution boxes can have a big effect on the safety, economy, and bottom line of your project. This guide helps you compare both choices

IEC / BS 7671 Codes for Consumer Unit and Distribution Board

The IEC (International Electrotechnical Commission) and BS 7671 (British Standard for Electrical Installations) both provide essential requirements for electrical installations, including those for fuse

What is the Ideal Installation Height for a Distribution Box

The proper installation of a distribution box involves placing it at the right height to ensure safety and convenience. Mounting it 4.5 to 5.5 feet (1.4 to 1.7 meters) high makes it easily accessible without

"Guidelines for Household Distribution Box Specifications and ...

In this article, we will explore the specifications for household distribution boxes and provide guidance on how to install them correctly.

How to Install a Cable Distribution Box Safely and Correctly?

Conduct a detailed survey of the installation site to determine the installation location of the cable distribution box. The installation location should be dry and ventilated, away from

Size determination, installation method and wiring mode of distribution ...

6) The electrical appliances in the distribution box shall be first installed on the non-metallic or wooden insulated electrical installation board, and then fastened in the distribution box as a whole.

Technical Measures for the Installation of Distribution Boxes

The construction and installation points of distribution boxes and switch boxes are summarized as follows: 1. Select qualified products that meet national standards and safety requirements.

© 2026 CJC FIBRE CONSULTANTS - All rights reserved

Distribution Box and Selection Guide: Internal Structure, Components ...

Learn how to choose a distribution box and understand its internal structure, including MCBs, busbars, neutral bars, earth bars, RCDs, RCBOs, SPDs, enclosure ratings, and wiring layout.

Requirements And Specifications For Installation Of Distribution Boxes ...

In flammable and explosive environments, explosion-proof distribution boxes should be selected and explosion-proof treatment should be carried out. The installation of explosion-proof

unsupervised_topic_modeling/topics/en/17/50/100/topics at ...

Contribute to annontopicmodel/unsupervised_topic_modeling development by creating an account on GitHub.

Distribution box

Yet the distribution box is a highly complex component that not only ensures safe power distribution, but is also responsible for protection in an emergency. In this article, you will learn everything you need

Installation requirements for distribution boxes

Distribution boxes shall be made of non-combustible materials; open distribution boards may be installed in production places and offices with low electric shock risk; enclosed cabinets shall

Design requirements and standards for low voltage distribution boxes

Regularly inspect and maintain your distribution box to catch issues early and ensure safe operation. Design requirements for low voltage distribution boxes Voltage and current ratings You

How to Choose a House Distribution Box | CHINT global

A well-chosen distribution box ensures the safety and efficiency of your household electrical system. This article guides you through selecting a distribution box.

Key Points Of Installation And Collocation Of Distribution Box In ...

7. The wire inlets and outlets in the distribution box and switch box shall be set at the lower bottom of the box. It is strictly prohibited to set them at the top, side, back or door of the box. The inlets and outlets

IEC Standard for Power Distribution Board Design and Layout

© 2026 CJC FIBRE CONSULTANTS - All rights reserved

Designing a power distribution board is not just about placing components inside a metal box. It requires a deep understanding of international standards, safety practices, and electrical

How to Install a Cable Distribution Box Safely and Correctly?

In modern electrical systems, cable distribution boxes (also known as electrical distribution boxes or distribution boxes) play a crucial role as the key hub for managing, distributing,

Contact Us

Continue your research online:

Website: https://cjcconsultants.co.za
Technical inquiry: https://cjcconsultants.co.za/contact.html

This document is for preliminary research. Verify specifications against current standards, product documentation and project requirements.

© 2026 CJC FIBRE CONSULTANTS - All rights reserved