Passive Optical Devices

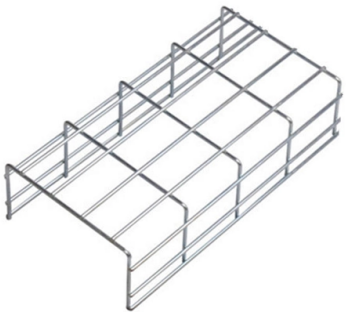

Overview

What Are Passive Optical Components and How Do They Work?

In a PON, the light signal originates from a single device at a central office and is distributed.

Key Takeaways

Passive optical devices, such as optical splitters, distribute a single light source from one fiber to multiple endpoints without requiring power.

Overview of Passive Optical Devices

Passive optical devices operate without electrical power, relying solely on the physical properties of light, such as reflection, refraction, and interference, to guide and manipulate optical signals. They are highly reliable, require minimal maintenance, and are ideal for harsh or remote environments where powering devices is impractical. These devices are fundamental in fiber-optic networks, particularly in Passive Optical Networks (PONs), where they manage the flow of data from a central source to multiple users.

Single-

Point Light Source Distribution

© 2026 CJC FIBRE CONSULTANTS - All rights reserved

In a PON, a single-point light source—typically from an Optical Line Terminal (OLT)—is transmitted through a single-mode fiber to a passive optical splitter. The splitter then divides the light into multiple output fibers, allowing one optical signal to serve multiple Optical Network Units (ONUs) or Optical Network Terminals (ONTs) at the user end. This point-to-multipoint topology reduces the number of fibers required and eliminates the need for powered devices between the central office and end users.

Optical Splitters

Optical splitters are the key passive devices enabling single-point light distribution. They come in various split ratios, such as 1: 2, 1: 4, 1: 8, 1: 16, and 1: 32, meaning a single input fiber can serve multiple subscribers. Splitters work by refracting and duplicating the incoming light into multiple output fibers.

They are purely passive, consuming no power, and are compatible with different PON architectures like GPON and EPON.

Advantages

Cost Efficiency: Reduces the need for dedicated fibers for each user. Reliability: No electronic components, minimizing malfunctions and maintenance. Scalability: Supports multiple users from a single light source.

Flexibility: Can be deployed in various network environments, including local area networks (POLAN) and broadband access networks.

Considerations

While passive optical splitters are robust, locating faults can be challenging. Issues such as fiber damage, bad splices, or dirty connectors can increase insertion loss and affect signal quality. Proper maintenance, including cleaning or replacing connectors, is essential to maintain network performance.

In summary, passive optical devices using a single-point light source are essential for efficient, reliable, and scalable fiber-optic networks, enabling one optical signal to serve multiple endpoints without the need for powered components.

© 2026 CJC FIBRE CONSULTANTS - All rights reserved

Article Content

What Are Passive Optical Components and How Do They Work?

In a PON, the light signal originates from a single device at a central office and is distributed to multiple subscribers through passive splitters in the field.

What Is Passive Optical Networking (PON)?

Optical splitters take a single light source (a single fiber-optic strand) and refract and duplicate it multiple times to "outbound" fibers. In its simplest form, an optical

Passive Optical Networks (PON): Components and Applications

Dive deep into the world of Passive Optical Networks (PON). Explore its key components, understand its structure, and discover the numerous applications it holds in today''s high-speed

Passive optical network

A passive optical network (PON) is a fiber-optic telecommunications network that uses only unpowered devices to carry signals, as opposed to electronic equipment.

The Core Passive Optical Network Components Explained

Discover the essential passive optical network components that power modern fiber connectivity. Learn about the roles of the OLT, ONU/ONT,

The Definitive Guide to Passive Optical Network (PON): Architecture ...

In essence, a PON is a fiber-optic system that delivers data from a single source to multiple endpoints using only unpowered devices for signal distribution, a key differentiator from

Optical Passive Components and Their Applications

DK Photonics is a world-class manufacturer of high-quality optical passive components for fiber laser and Optical Fibers applications. We offer a low-cost and high-quality option for all the

Passive Optical Device

In this chapter we will survey the key passive optical devices used in integrated photonic chips and compare the various approaches used to meet datacom application needs.

Passive Optical Networks: Cabling Considerations and

In this white paper, Cisco and Panduit describe the critical components used in PONs and discusses network architectures to consider in

© 2026 CJC FIBRE CONSULTANTS - All rights reserved

Understanding Passive Optical Networks (PON): Architecture,

What Is a Passive Optical Network (PON)? PON is a point-to-multipoint fiber-optic network that uses passive splitters to divide a single optical signal into multiple signals, distributing them to several users.

Optical passive products FAQs

Optical passive products play a critical role in fiber optic communication systems. By manipulating light signals without requiring an external power source, they help to ensure that signals are transmitted

What Are Passive Optical Components and How Do They Work?

Passive optical devices manage the flow of data through a fiber optic network. Optical splitters, also referred to as couplers, distribute a single incoming light signal into multiple output

Passive Optical Device

Abstract Passive devices and circuits are the bedrock and framework of integrated photonic chips. They route, integrate, and interfere with optical signals, forming the basis for all of the functionalities

Passive optical network

Passive optical network A fiber optic cable assembly with SC APC connectors, as commonly used to link optical network terminals to passive optical networks A

Passive Optical Network

The PON (Passive Optical Network) is a passive optical network that is typically deployed in a point-to-multipoint fashion similar to a star network. The single fiber leaving the central office is typically split,

Passive Devices | Springer Nature Link

The most relevant functionalities of passive devices are (i) physically connecting devices, (ii) splitting and coupling, but also (iii) separating and redirecting light travelling into opposite

3D scanning

For example, optical technology may encounter difficulties with dark, shiny, reflective or transparent objects while industrial computed tomography scanning, structured-light 3D scanners, LiDAR and

passive optical device | Springer Nature Link

© 2026 CJC FIBRE CONSULTANTS - All rights reserved

Note: Examples of passive optical devices are (a) fiber optic couplers, bundles, splitters, mixers, filters, and attenuators, (b) lenses, prisms, and all-optical multiplexers and demultiplexers,

Contact Us

Continue your research online:

Website: https://cjcconsultants.co.za
Technical inquiry: https://cjcconsultants.co.za/contact.html

This document is for preliminary research. Verify specifications against current standards, product documentation and project requirements.

© 2026 CJC FIBRE CONSULTANTS - All rights reserved