How to secure cables in a sealed cable tray

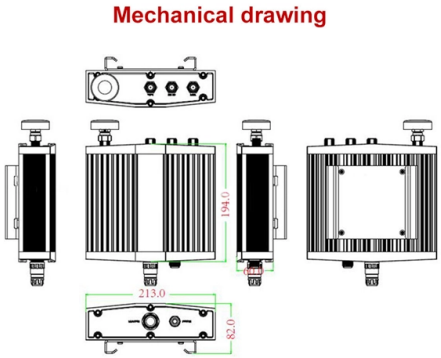

Overview

Cable tray installed in a hazardous location must contain only those cables that are appropriate for this type of environment as defined in Chapter 5 of the NEC.

Key Takeaways

Cables in a sealed cable tray should be secured using proper banding, clamps, or security kits to prevent movement, maintain spacing, and ensure safety and compliance.

Choose the Right Tray and Cover

Select a cable tray type suitable for your application. Ventilated troughs or solid-bottom trays provide continuous support for cables, while wire mesh trays can be enclosed with covers or security kits for high-security or sensitive installations. Ensure the tray material is compatible with the environment, such as corrosion-resistant aluminum or fiberglass-reinforced plastic for wet or chemical-prone areas.

Restrain Cables Properly

Inside the tray, cables should be bundled and restrained to prevent sagging or movement. Use cable ties, clamps, or banding at regular intervals, typically every 6 to 9 inches for small instrumentation cables, and at the tray rungs or bottom for larger power cables. Bundles should be balanced at the center to distribute weight evenly and avoid stress on the tray or cables.

© 2026 CJC FIBRE CONSULTANTS - All rights reserved

Maintain Minimum Bend Radius

Ensure that cables exiting or entering the tray respect the minimum bend radius specified by the manufacturer to prevent insulation damage or signal degradation. Avoid sharp bends or tight loops, especially in enclosed trays where space is limited.

Use Security Kits for Enclosed Trays

For wire mesh or high-security trays, consider security kits that convert open trays into fully enclosed, tamper-resistant runs. These kits provide robust protection against unauthorized access and physical interference while maintaining proper cable support.

Follow Standards and Codes

Always comply with NEC Article 392 and relevant local electrical codes. Proper installation includes bonding and grounding, correct cable fill calculations, and ensuring that the tray can support the total cable weight without sagging or deformation. Using manufacturer-approved fasteners and covers ensures long-term durability and safety.

Summary

To secure cables in a sealed cable tray: Select the appropriate tray type and cover for your environment. Bundle and restrain cables using ties, clamps, or banding at recommended intervals. Maintain minimum bend radius to prevent damage.

Use security kits for wire mesh trays in sensitive areas. Follow electrical codes and manufacturer guidelines for installation, bonding, and grounding. This approach ensures mechanical stability, safety, and ease of maintenance for your cable tray system.

Article Content

Connecting Cable Trays: Your Guide to Secure and

Learn common methods for connecting cable trays safely and efficiently. Our guide covers splice plates, quick-connects, and key tips for

A Guide to Installing and Supporting Electrical Cable Trays

This guide covers the critical steps, from selecting the right electrical cable tray and performing accurate cable fill calculations to managing a safe cable pull through

Wiring in Cable Trays: Your Guide to Tidy and Safe

Learn essential principles for wiring in cable trays. Our guide covers segregation, fill, bending, grounding, and labeling for safe, tidy, and reliable cable

© 2026 CJC FIBRE CONSULTANTS - All rights reserved

Cable Tray Technical Guide A practical guide to product selection and ...

Cable tray installed in a hazardous location must contain only those cables that are appropriate for this type of environment as defined in Chapter 5 of the NEC.

Cable Tray Installation Rules (NEC 392) – Electrical Trader

In vertical or angled tray runs, cables should be fastened to the tray''s transverse members to keep them secure. In horizontal runs, the weight of the cables often keeps them in place,

Cable Tray Installation Guidelines | PDF | Galvanization

The document outlines steps for laying cables, including installing supports, fixing the tray, laying cables with proper spacing, and tying them with cable ties. Specifications are provided for tray dimensions

Best Practice Guide to Cable Ladder and Cable Tray Systems

This guide covers cable ladder systems, cable tray systems, channel support systems and associated supports intended for the support and accommodation of cables and possibly other electrical

How to Secure Cable Trays in High-Vibration Environments: A Field

Eliminate cable tray failure in high vibration environments. Learn the method of how to lock your locking fasteners, damping pads and optimum spacing, to prevent metal fatigue and make

Best Fixing and Mounting Options for Cable Trays | CMW

Discover the best fixing and mounting options for cable trays and wire mesh basket trays. CMW shares tips for efficient cable management.

Step-by-Step Guide to Cable Tray Barrier Installation

Learn the essential steps for cable tray barrier installation, including pre-planning, securing supports, and ensuring compliance with industry standards for safety and organization.

The Complete Guide to Fiber Optic Cable Management

Ultimate fiber optic cable management guide: Best practices for installation, organization & maintenance - ensure network reliability.

PEGZONE Under Desk Cable Management Tray, 31.5 Inches Metal

About This Sturdy & Hassle-FreeSecure Screw Mount Installation.Say goodbye to messy cables! This under desk cable management tray features a two-part metal structure that installs effortlessly

© 2026 CJC FIBRE CONSULTANTS - All rights reserved

Top 5 Cable Management Solutions for Desk & Floor and Home

Discover the best cable management solutions to keep your workspace tidy. Our hands-on review covers five top products, from sleek under-desk trays to durable floor cord covers,

AllHome Basics PEGZONE Under Desk Cable Management Tray,

About This Sturdy & Hassle-FreeSecure Screw Mount Installation.Say goodbye to messy cables! This under desk cable management tray features a two-part metal structure that installs effortlessly

Best Practices for Installing Cables in Trays

Learn the best practices for installing cables in trays. This guide covers essential steps, technical requirements, and key details for efficient cable

AEONS Premium Monitor Laptop Mount & Under Desk Cable Management Tray ...

Keep cables tidy with detachable cable clips on monitor arms, using under desk cable management to keep power strips and adapters well hidden and organized. MONITOR & LAPTOP MOUNT:

Access Control Cabling Requirements: 2026 Guide

Cables & Chips Field Guide / Industry Insights Access Control Cabling Requirements: 2026 Guide Discover essential access control cabling requirements for 2026. Ensure your system is

Essential Steps for Cable Tray Installation on Roof

Learn essential steps for cable tray installation on roof, including support systems, material selection, and environmental considerations for optimal performance and durability.

Related Video Reference

This video was associated with the source search result. Verify technical details against current product documentation and project requirements.

© 2026 CJC FIBRE CONSULTANTS - All rights reserved

Contact Us

Continue your research online:

Website: https://cjcconsultants.co.za
Technical inquiry: https://cjcconsultants.co.za/contact.html

This document is for preliminary research. Verify specifications against current standards, product documentation and project requirements.

© 2026 CJC FIBRE CONSULTANTS - All rights reserved