How to connect fiber optic cables in a triple-play data center

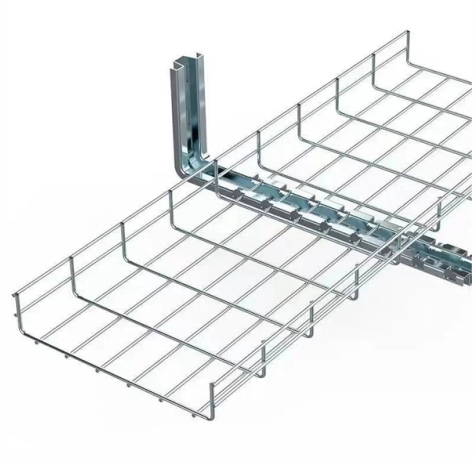

Overview

Best Practices for Fiber Optic Cabling in Data CentersDiscover the best practices for fiber optic cabling in data centers, including cable management, labe.

Key Takeaways

Proper fiber optic connection in a triple-play data center requires careful planning, correct cable selection, structured routing, and thorough testing to ensure high-speed, reliable service.

Planning and Design

Before installation, map out the cable pathways within the data center, including overhead trays, raised floors, or walls, ensuring they are free of obstacles. Determine the fiber type (single-mode for long distances, multimode for shorter runs) and connector types (MPO, LC, or SC) based on your equipment requirements. Allocate extra cable length for future reconfigurations to maintain flexibility and scalability.

Cable Routing and Management

Separate fiber and copper cables to prevent interference. Use horizontal and vertical cable trays to organize cables neatly and maintain airflow. Maintain the minimum bend radius (typically 10x the cable diameter) to avoid signal degradation.

Use Velcro ties instead of zip ties to secure cables without damaging them. Label all cables clearly at both ends and intermediate points, using color-coding for easy identification.

© 2026 CJC FIBRE CONSULTANTS - All rights reserved

Connector Handling and MPO Assembly

Inspect MP

O connectors under a microscope and clean them using proper MPO cleaning tools before insertion. Ensure correct polarity (Method A or B) for 40/100G multimode parallel fiber solutions to maintain signal integrity.

Plug MP

O connectors into adapters or transceivers with proper orientation and alignment. For high-density connections, consider ribbon cables or pre-terminated trunks to reduce installation time and increase fiber density.

Testing and Documentation

Test each fiber link for insertion loss and return loss using an MPO tester or OTDR. Record all test results, cable maps, and port assignments for future troubleshooting and upgrades. Maintain a structured documentation system to track fiber connections, ensuring quick identification and repair if needed.

Deployment Considerations

Use pre-terminated fiber assemblies for faster deployment and reduced risk of errors. For cabinet-to-cabinet backbone links, prefer trunks with MPO connectors for mechanical protection and scalability. Plan for future expansion by leaving space in racks and trays for additional fibers.

By following these best practices, a triple-play data center can achieve high-performance, reliable, and scalable fiber optic connectivity, supporting internet, TV, and voice services efficiently.

Article Content

Best Practices for Fiber Optic Cabling in Data Centers

Discover the best practices for fiber optic cabling in data centers, including cable management, labeling, and testing. Learn how to optimize performance and

Comprehensive Guide to Data Center Fiber Optic

The diagram above illustrates the critical components of fiber optic cables used in data center applications, highlighting the precise engineering required for optimal

Deploying Fiber Cabling in the Data Center

Panduit offers a variety of Fiber Cabling Systems and configurations and meet the unique needs of a data center project of any scale. This guide covers common considerations for using these products,

© 2026 CJC FIBRE CONSULTANTS - All rights reserved

Best Practices for Fiber Optic Cabling in Data Centers

In this article, we''ll explore the best practices for fiber optic cabling in data centers, covering everything from planning to maintenance (2). 1. Plan Cable Paths and Lengths. One of...

Rack and MPO Assembly Procedures in Data Centers

A well-executed rack and MPO assembly process sets the foundation for a high-performance, scalable, and easily maintainable data center. By following structured procedures and

Top Tips for Installing and Maintaining Fiber Optic

In this article, we''ll explore the best practices for installing and maintaining fiber optic cables in data centers, ensuring optimal performance,

The Ultimate Guide to Data Center Fiber Connectivity

As businesses strive for uninterrupted operations and seamless data flow, the role of fiber optics in data centers takes center stage. Let''s explore the intricacies of data center fiber connectivity, unraveling

Data Center Interconnect Cabling Best Practices | Corning

Learn the best practices for designing and deploying extreme-density data center interconnects in data center campuses.

15 best practices for data center fiber-optic cabling installation

"These guidelines help improve operations by minimizing the risk of failure due to inadequate planning, mishandling of fiber cabling, improper testing, and reducing installation time,"

AOC vs Fiber Optic Cable: Which Is Better for Your Network?

AOC vs Fiber Optic Cable: Which Is Better for Your Network? Understand the real difference between Active Optical Cables (AOC) and fiber optic cables with optical transceivers, and

5 Best Fiber Optic Cable | Under 10ms Latency Data Lines

A fiber optic cable that drops packets or introduces latency defeats the purpose of upgrading your network backbone. The wrong jumper, whether too fragile or mismatched for your transceivers, turns

5 Best Fiber Optic Cable For Internet | 30M Armored Fiber: Speed

© 2026 CJC FIBRE CONSULTANTS - All rights reserved

In this guide, I break down the most reliable fiber optic cable for internet installations, covering armored outdoor runs, flexible indoor patch cables, and the exact connector types your ISP''s ONT expects to

Top 7 Fiber Optic Companies: Market Share & Analyst

VMR Industry Intelligence: A evaluation of the top 7 fiber optic vendors. Featuring market share data, Proprietary Intelligence Scores (PIS), and

Fiber Optic Adapter Guide: Types, Tips & Solutions | FiberMania

This comprehensive guide explains what fiber optic adapters are, their common types, key selection criteria, cleaning best practices, frequently asked questions, and how customized

Guide to Fiber Optic Drop Cable

Fiber Optic Drop Cable is a critical component of any broadband network. It is the connection from the side of the house or multi-dwelling structure to the fiber enclosure where the

The FOA Reference For Fiber Optics

All these wireless systems depend on the same fiber optic communications backbones that everyone else does. As they grow, higher bandwidth demands means more traffic to local antennas which

Multi-fiber Push On (MPO) Connectors

Multi-fiber push on connectors, or MPOs, are fiber cable connectors comprised of multiple optical fibers. Learn more at Fluke Networks.

Fiber Optic Connector Types: A Beginners Guide

The fiber connector types, sometimes referred to as terminations, link fiber optic cables together through terminals, switches, adapters, and patch

Related Video Reference

This video was associated with the source search result. Verify technical details against current product documentation and project requirements.

© 2026 CJC FIBRE CONSULTANTS - All rights reserved

Contact Us

Continue your research online:

Website: https://cjcconsultants.co.za
Technical inquiry: https://cjcconsultants.co.za/contact.html

This document is for preliminary research. Verify specifications against current standards, product documentation and project requirements.

© 2026 CJC FIBRE CONSULTANTS - All rights reserved