After-sales service for high-temperature resistant samples of small busbars

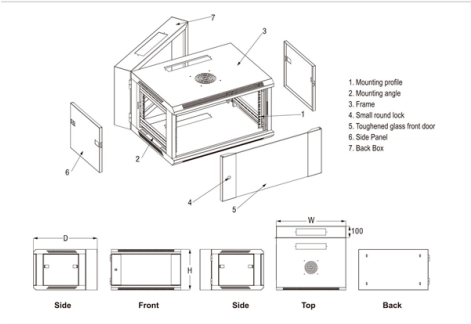

Overview

kvbtech – Premium Refractory SolutionsKVB Tech is a leading provider of premium refractory materials, specializing in fire bricks, castables, and high-temp.

Key Takeaways

After-sales support for high-temperature resistant busbars includes technical consultation, material testing, maintenance, and replacement services tailored to extreme thermal applications. Service Providers and Support OptionsHi-Temp Products offers after-market solutions for high-temperature process applications, providing consultation, technical guidance, process development, and service support for equipment or components no longer covered under OEM agreements. This includes assistance with legacy busbars and high-temperature samples, ensuring continued operational reliability.

Applied Technical Services specializes in high-temperature mechanical testing, including tensile testing of materials at temperatures up to 1800°F. Their laboratories are ISO/IEC 17025: 2017 accredited, providing precise data on tensile strength, stress-strain behavior, and material suitability for high-temperature applications. This is particularly useful for validating small busbars under operational thermal loads.

© 2026 CJC FIBRE CONSULTANTS - All rights reserved

Element provides high-pressure high-temperature (HPHT) testing, simulating extreme service conditions to evaluate material performance under combined thermal and pressure stresses. Their services cover metals, alloys, and composite materials, offering actionable insights for both qualification testing and failure analysis. Canyon Components supplies high-temperature elastomers and custom parts that can complement busbar assemblies, ensuring thermal stability, chemical resistance, and mechanical integrity in extreme environments.

They also provide expert guidance for material selection and custom manufacturing.

A

X Quartz Store offers high-temperature resistant quartz glass test tubes and labware capable of withstanding temperatures up to 1200°C, which can be used for testing or handling high-temperature samples safely.

Recommended After-

Sales Actions

Technical Consultation: Engage with service providers to assess the condition and suitability of busbars for continued high-temperature operation. Material Testing: Conduct tensile, thermal, and HPHT testing to verify performance under expected operating conditions. Maintenance and Repair: Replace or refurbish busbars and associated components using high-temperature resistant materials.

Custom Solutions: Consider custom parts or elastomers to enhance thermal performance and longevity. Documentation and Compliance: Ensure all testing and service activities comply with relevant standards and certifications. By leveraging these services, organizations can maintain the reliability and safety of small busbars in high-temperature applications, extend their operational life, and prevent unexpected failures.

Article Content

kvbtech – Premium Refractory Solutions

KVB Tech is a leading provider of premium refractory materials, specializing in fire bricks, castables, and high-temperature insulation solutions. Our commitment to quality and innovation has made us a

EMS | ⚡ High-quality Plated Busbars Customized

We engineer and manufacture customized plated busbars for more corrosion resistance and electrical conductivity from high quality materials.

High Temp Cable | Heat-Resistant Electrical Wire | OmniCable

© 2026 CJC FIBRE CONSULTANTS - All rights reserved

With options up to 600V and 15KV, our high-temperature cables include various AWG sizes (from 24 to 750 kcmil) and conductor materials like bare and tinned copper. Trust OmniCable for durable, high

High Temperature Cable Cables

Polycab''s heat resistant cables feature high thermal resistance, fire retardance, oil resistance, and acid resistance, ensuring superior performance and reliability in demanding environments.

Heat Resistant Cables | Fire Resistant Cable up to +400°C | Fire

This ensures temperature-resistant cables that not only withstand thermal stress but also deliver long-term reliability. In the following overview, you will find a selection of high-temperature cables that

High-Temperature Resistant Custom Bus Duct, Special Material,

High-Temperature Resistant Custom Bus Duct, Special Material, Dedicated for Power Distribution in Metallurgical Kilns, Find Details and Price about Bus Duct and Busway Bus Duct from Shandong

Fire-Resistant Bus Duct, High Temperature Resistant for 90 Minutes ...

Shandong Harbor Electric Power Engineering Co., Ltd. is a high-tech enterprise focused on the field of power transmission, distribution, and control systems, integrating research and development,

High Temperature Fasteners

Whatever the temperature of your application, Extreme Bolt & Fastener offers fasteners that are designed to endure the most challenging environments in the form of specialty polymers, advanced

Where Can I Buy Refractory Bricks?

High alumina bricks are highly sensitive to raw material quality and firing control. Highland Refractory supplies multiple alumina grades with stable refractoriness, load resistance, and

Gartner Business Insights, Strategies & Trends For

Gain strategic business insights on cross-functional topics, and learn how to apply them to your function and role to drive stronger performance and innovation.

Randex | Automated Storage & Retrieval Systems

UK suppliers of automated vertical lifts, mobile shelving, compact storage and office filing systems. Maximise space, optimise retrieval.

© 2026 CJC FIBRE CONSULTANTS - All rights reserved

Full text of "NEW"

Full text of "NEW" See other formats Word . the, > < br to of and a : " in you that i it he is was for - with) on (? his as this ; be at but not have had from will are they -- ! all by if him one your or up her there

High-Voltage Busbars

Thermal shock test, thermal shock resistance Automotive components are subjected to severe temperature cycling and thermal shock tests. Busbars are made of several materials (copper,

High Temperature Busbar System

Manufactured with heat-resistant materials and high-grade insulation, our high temperature busbar systems are capable of withstanding continuous exposure to ambient temperatures up to +140°C,

unsupervised_topic_modeling/topics/en/17/50/100/topics at master ...

Contribute to annontopicmodel/unsupervised_topic_modeling development by creating an account on GitHub.

High Voltage Busbars by Intercable Automotive Solutions

One of the signature products developed by Intercable Automotive Solutions are our custom made high-voltage busbars manufactured to client specifications.

Busbar Systems & Electrical Trunking | Schneider Electric UK

Design a flexible and efficient power distribution system with Schneider Electric UK''s innovative busbar systems. Explore Canalis busbars for a modular approach to electrical distribution.

Busbar reliability and maintenance considerations in context of busbar ...

Replacement: Busbars should be replaced as needed to maintain system reliability and prevent potential failures. Conclusion: Busbar reliability and maintenance considerations are critical

© 2026 CJC FIBRE CONSULTANTS - All rights reserved

Contact Us

Continue your research online:

Website: https://cjcconsultants.co.za
Technical inquiry: https://cjcconsultants.co.za/contact.html

This document is for preliminary research. Verify specifications against current standards, product documentation and project requirements.

© 2026 CJC FIBRE CONSULTANTS - All rights reserved